KOMA PRECISION
THE KEY TO PERFORMANCE
www.komaprecision.com

ROMAI®

ANGLE HEAD
Selection Guide
2022

WE FOCUS ON BEING THE BEST–
that's why leading companies choose Koma.

WE ARE THE EXCLUSIVE NORTH AMERICAN IMPORTER, NATIONAL DISTRIBUTOR, AND SERVICE CENTER FOR ALBERTI ANGLE HEADS.

NXT Generation

KOMA PRECISION

ABOUT US

For over forty years Koma Precision has been the foremost source for the finest the world has to offer in machine tool Productivity Innovation.

With over 30,000 rotary table installations, Koma is the largest distributor of Tsudakoma NC rotary tables and indexers in the world. With over 12,000 angle heads and live tools installed, Koma is the world's largest supplier for Alberti - the originator and the foremost innovator of productivity tooling.

NXT ANGLE HEAD PRICING

KOMA PRECISION
THE KEY TO PERFORMANCE

S 90° ANGLE HEADS	SIZE	RATIO	OUTPUT*	SHANK*
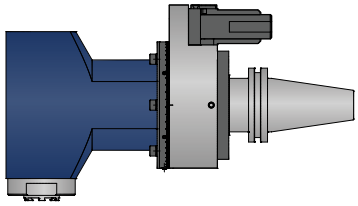	4	1:1	ER-16	BT 30
	5	1:1	ER-20A	40/50 Taper
	6	1:1	ER-25	40/50 Taper
	7	1:1	ER-32	40/50 Taper
	10	1:1	ER-40	50 Taper
	20	1:1	ER-50	50 Taper
	30	1:1	ER-50	50 Taper
G EXTENDED LENGTH 90° ANGLE HEADS	**SIZE**	**RATIO**	**OUTPUT***	**SHANK***
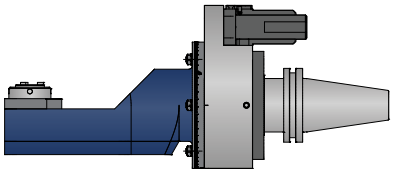	5	1:1	ER-20A	40/50 Taper
	6	1:1	ER-25	40/50 Taper
	7	1:1	ER-32	40/50 Taper
	10	1:1	ER-40	50 Taper
	20	1:1	ER-50	50 Taper
	30	1:1	ER-50	50 Taper
S-2 DUAL OUTPUT 90° ANGLE HEADS	**SIZE**	**RATIO**	**OUTPUT***	**SHANK***
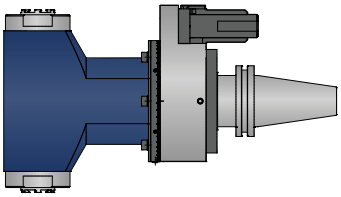	5	1:1	ER-20A	40/50 Taper
	6	1:1	ER-25	40/50 Taper
	7	1:1	ER-32	40/50 Taper
	10	1:1	ER-40	50 Taper
	20	1:1	ER-50	50 Taper
	30	1:1	ER-50	50 Taper
W OFFSET 90° ANGLE HEADS (COOLANT OPTIONAL)	**SIZE**	**RATIO**	**OUTPUT***	**SHANK***
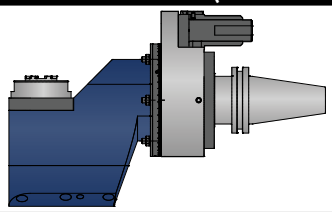	5	1:1	ER-20A	40/50 Taper
	6	1:1	ER-25	40/50 Taper
	7	1:1	ER-32	40/50 Taper
	10	1:1	ER-40	50 Taper
	20	1:1	ER-50	50 Taper
	30	1:1	ER-50	50 Taper
D ADJUSTABLE ANGLE HEADS (COOLANT OPTIONAL)	**SIZE**	**RATIO**	**OUTPUT***	**SHANK***
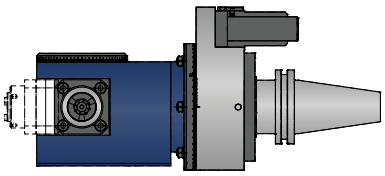	5	1:1	ER-20A	40/50 Taper
	6	1:1	ER-25	40/50 Taper
	7	1:1	ER-32	40/50 Taper
	10	1:1	ER-40	50 Taper
	20	1:1	ER-50	50 Taper
	30	1:1	ER-50	50 Taper
F CUSTOM FIXED ANGLE HEADS (COOLANT OPTIONAL)	**SIZE**	**RATIO**	**OUTPUT***	**SHANK***
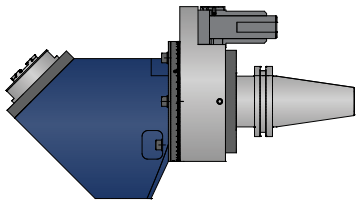	5	1:1	ER-20A	40/50 Taper
	6	1:1	ER-25	40/50 Taper
	7	1:1	ER-32	40/50 Taper
	10	1:1	ER-40	50 Taper
	20	1:1	ER-50	50 Taper
	30	1:1	ER-50	50 Taper

***Tools available with other outputs & shanks (BT, HSK, etc.) • Dimensions: millimeters**

NXT ANGLE HEAD PRICING

"S" SERIES ANGLE HEADS

For machining tasks without geometric constraints. Internal coolant optional.

S 90° ANGLE HEADS

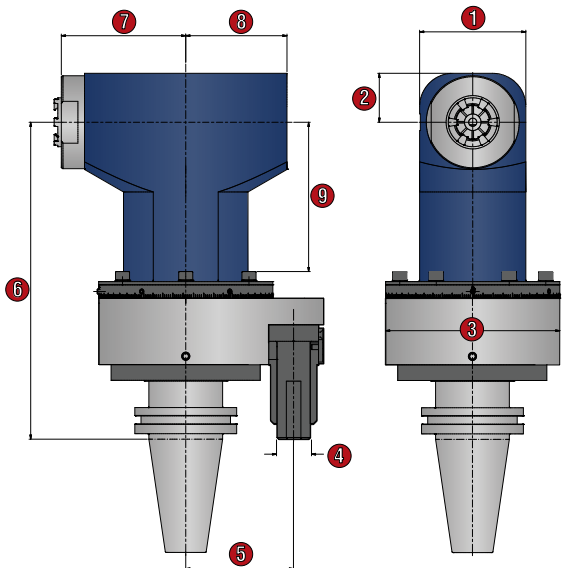

Tool	S4	S5	S6	S7	S10	S20	S30
OUTPUT	ER-16	ER-20A	ER-25	ER-32	ER-40	ER-50	ER-50
SHANK	BT30	40/50	40/50	40/50	50	50	50
Nm/ft.lbs.	1.5/1.1	15/11.1	43/31.7	70/51.6	120/88.4	250/184.3	500/368.5
RPM	8,000	8,000	8,000	8,000	6,000	3,000	2,000
kg/lbs.	3/6.6	4/8.8	6/13.2	10/22	13/28.6	19/41.8	35/77
1	40	42	64	64	80	99	110
2	20	21	32	32	34	45	55
3	85	85	105	105	125	160	180
4	18	18	18	18	18	18	18
5	65	65/80	65/80	65/80	110	110	130
6	130	150	200	200	200	200	250
7	60	83	97	98	116	120	120
8	35	43	60	61	63	84	100
9	39	59	95	95	95	90	140

"G" SERIES ANGLE HEADS

For special machining tasks with strong geometric constraints. Set-back output to maximize the usable tool length. Internal coolant optional.

G EXTENDED LENGTH 90° ANGLE HEADS

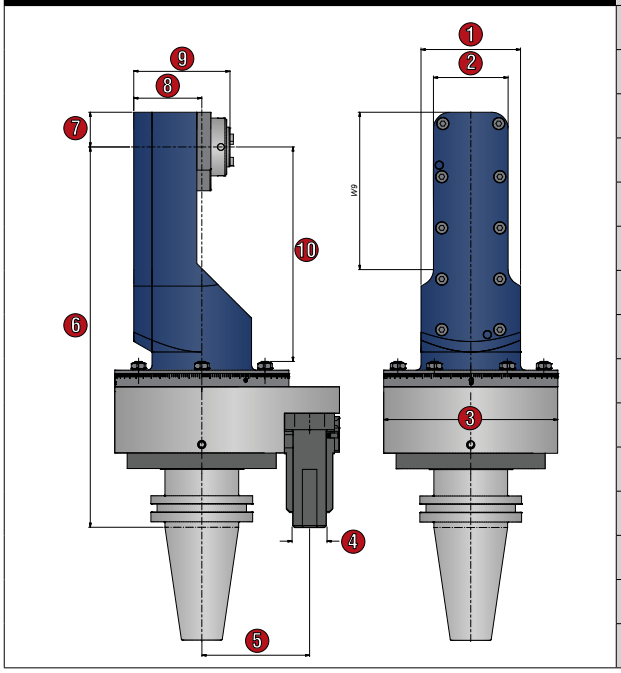

Tool	G5	G6	G7	G10	G20	G30
OUTPUT	ER-20A	ER-25	ER-32	ER-40	ER-50	ER-50
SHANK	40/50	40/50	40/50	50	50	50
Nm/ft.lbs	15/11.1	43/31.7	70/51.6	120/88.4	250/184.3	500/368.5
RPM	8,000	6,000	4,000	4,000	3,000	2,000
kg/lbs.	6/13.2	8/17.6	12/26.4	16/35.2	23/50.6	36/79.2
1	60	70	80	90	110	130
2	45	55	65	80	99	119
3	85	105	105	125	160	180
4	18	18	18	18	18	18
5	65/80	65/80	65/80	110	110	130
6	230	240	250	290	330	380
7	21	25	32	40	45	55
8	42	50	60	98	113	140
9	57	65	77	94	99	135
10	130	138	146	185	220	270

KOMA PRECISION
THE KEY TO PERFORMANCE

"S-2" SERIES ANGLE HEADS

For machining tasks in opposite direction or with different machining tools. Internal coolant optional.

S-2 DUAL OUTPUT 90° ANGLE HEADS

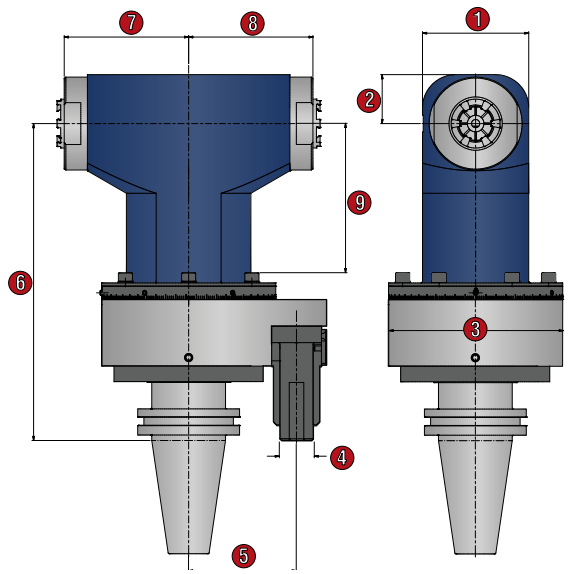

Tool	S5-2	S6-2	S7-2	S10-2	S20-2	S30-2
Price						
OUTPUT	ER-20A	ER-25	ER-32	ER-40	ER-50	ER-50
SHANK	40/50	40/50	40/50	50	50	50
Nm/ft.lbs	15/11.1	43/31.7	70/51.6	120/88.4	250/184.3	500/368.5
RPM	8,000	8,000	8,000	6,000	3,000	2,000
kg/lbs.	4/8.8	6/13.2	10/22	13/28.6	19/41.8	35/77
1	42	64	64	80	99	110
2	21	32	32	34	45	55
3	85	105	105	125	160	180
4	18	18	18	18	18	18
5	65/80	65/80	65/80	110	110	130
6	150	200	200	200	200	250
7	55	67	75	87	107	120
8	55	67	75	87	107	120
9	59	95	95	95	90	140

"W" SERIES ANGLE HEADS

For machining tasks with geometric constraints. Set-back output to maximize the usable tool length. Internal coolant standard, can be omitted optionally.

W OFFSET 90° ANGLE HEADS

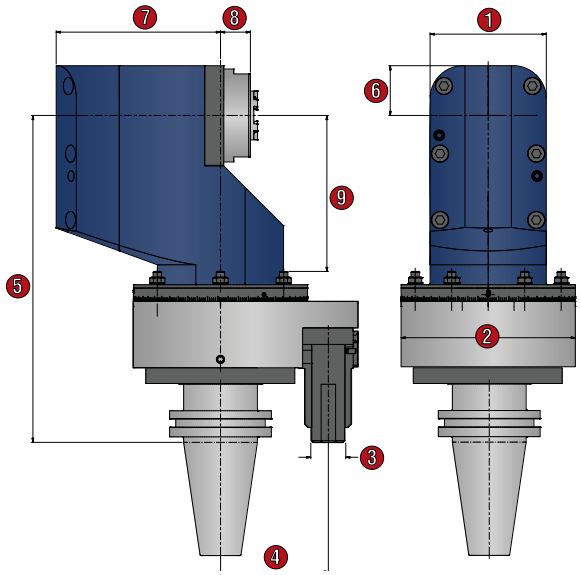

Tool	W5	W6	W7	W10	W20	W30
Price						
OUTPUT	ER-20A	ER-25	ER-32	ER-40	ER-50	ER-50
SHANK	40/50	40/50	40/50	50	50	50
Nm/ft.lbs	15/11.1	43/31.7	70/51.6	120/88.4	250/184.3	500/368.5
RPM	8,000	8,000	8,000	6,000	3,000	2,000
kg/lbs.	7/15.4	9/19.8	10/22	15/33	20/44	30/66
1	60	65	70	90	110	140
2	85	105	105	125	160	180
3	18	18	18	18	18	18
4	65/80	65/80	65/80	110	110	130
5	180	200	200	245	260	280
6	26	30	37	45	50	60
7	63	75	84	100	125	150
8	17	20	25	28	30	35
9	74	85	96	140	150	170

NXT ANGLE HEAD PRICING

"D" SERIES ANGLE HEADS

For machining tasks in a changing, angular position. Because of the variable adjustment, arbitrary angles between 0°-90° (process reliable) can be set. Up to 110° optional. Internal coolant standard, can be omitted optionally.

D 0°- 90° ADJUSTABLE ANGLE HEADS

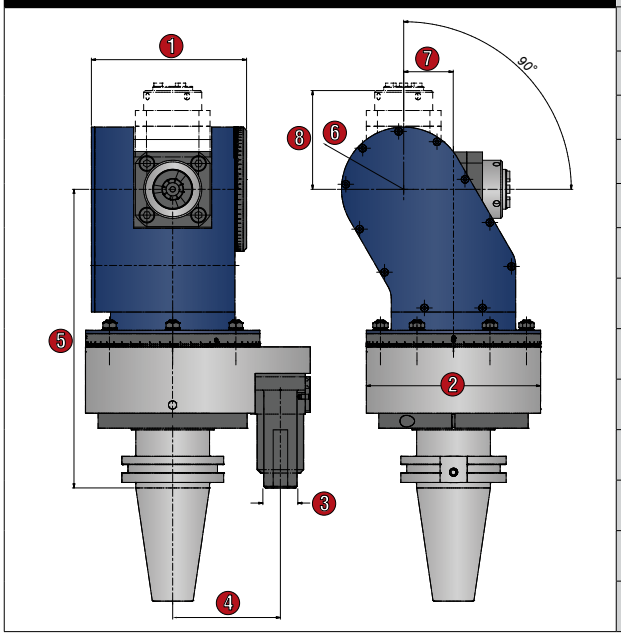

Tool	D5	D6	D7	D10	D20	D30
Price						
OUTPUT	ER-20A	ER-25	ER-32	ER-40	ER-50	ER-50
SHANK	40/50	40/50	40/50	50	50	50
Nm/ft.lbs	15/11.1	43/31.7	70/51.6	120/88.4	250/184.3	500/368.5
RPM	8,000	6,000	4,000	4,000	3,000	2,000
kg/lbs.	8/17.6	12/26.4	16/35.2	20/44	28/61.6	41/90.2
1	94	125	130	135	195	190
2	85	105	105	125	160	180
3	18	18	18	18	18	18
4	65/80	65/80	65/80	110	110	130
5	180	200	200	225	250	280
6	38	41	50	55	80	110
7	30	38	40	43	60	75
8	60	80	85	90	100	120

"F" SERIES ANGLE HEADS

For special machining tasks in a fixed angular position.
Internal coolant standard, can be omitted optionally.

F CUSTOM FIXED ANGLE HEADS

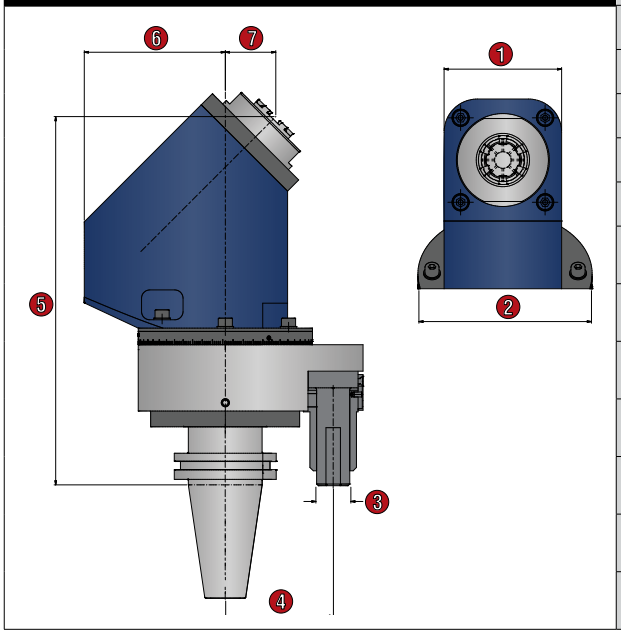

Tool	F5	F6	F7	F10	F20	F30
Price						
OUTPUT	ER-20A	ER-25	ER-32	ER-40	ER-50	ER-50
SHANK	40/50	40/50	40/50	50	50	50
Nm/ft.lbs	15/11.1	43/31.7	70/51.6	120/88.4	250/184.3	500/368.5
RPM	8,000	6,000	4,000	4,000	3,000	2,000
kg/lbs.	6/13.2	7/15.4	8/17.6	15/33	20/44	35/77
1	42	64	64	80	99	110
2	85	105	105	125	160	180
3	18	18	18	18	18	18
4	65/80	65/80	65/80	110	110	130
5	200	210	215	250	300	350
6	90	90	95	105	120	140
7	45	45	50	55	65	75

KOMA PRECISION
THE KEY TO PERFORMANCE

Angle Head Worksheet

Date _____

☐ **Dealer** Company: _____

Contact: _____

Address: _____

City: _____ State: _____ Zip Code: _____

E-mail: _____

Phone #: _____ Cell #: _____

☐ **End User** Company: _____

Contact: _____

Address: _____

City: _____ State: _____ Zip Code: _____

E-mail: _____

Phone #: _____ Cell #: _____

---

1. Machine Information: ☐ HMC ☐ VMC Make: _____ Model: _____

Taper: ☐ CAT 40 ☐ CAT 50 ☐ BT 40 ☐ BT 50 ☐ HSK 63 ☐ HSK 100 Other: _____

Tool Changer Specs: Max Weight: _____ Max Diameter: _____ Max Length: _____

2. Application Information:

Milling: ☐ End Mill Dia.: _____ # of Flutes / Inserts: _____

Depth of Cut: _____ Width of Cut: _____

RPM: _____ IPM: _____ Material: _____

Drilling: ☐ Drill Dia.: _____

RPM: _____ IPM: _____

Material: _____

Notes:

3. Head Information:

Style of Head: ☐ Fixed 90º ☐ 0º - 90º Adjustable

☐ Special Fixed Angle _____ ☐ Dual Output

☐ Extended Length _____ ☐ Tool Changed

☐ Hand Load ☐ Flange Mount

Output: ☐ ER _____ ☐ Weldon _____ ☐ Arbor _____

☐ HSK _____ ☐ 40 Taper ☐ 50 Taper

Specialty: _____

☐ Smart Change _____ ☐ W&F _____

Coolant:

☐ Coolant Required

Pressure: _____

☐ Through Orientation Pin

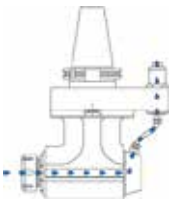

☐ Through Input Spindle

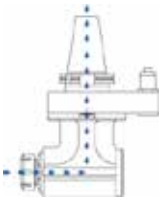

☐ Through Retaining Block

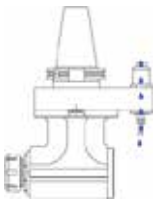

Notes:

UNLOCK YOUR POTENTIAL TODAY!

For Over 40 years Koma Precision Inc. has partnered with Tsudakoma and Alberti, to become the North American leader in machine tool accessories. Both Tsudakoma and Alberti machine tool accessories are built to the highest standards and set the bar for excellence, quality, and performance.

Koma Precision has an installation base of over 30,000 Tsudakoma rotary tables and 25,000 Alberti angle heads and live tools, leading the way with knowledge and experience.

Knowledge and Experience Matter.

Our three facilities totaling 40,000 sq/ft, feature a full machine shop, state-of-the-art inspection and test equipment, and product demonstration showroom. Our Connecticut based headquarters also houses our multi-million-dollar inventory of new products and spare parts.

20 Thompson Road
East Windsor, CT 06088

Tel: 1.800.249.5662
Fax: 860.623.4132
info@komaprecision.com

KOMA PRECISION
www.komaprecision.com